Pump and Partners

REAL

CHINA PUMP

CONSULTANCY

# Integrated Prefabricated Pumping Station

Domestic dwellings

Commercial and industrial complexes

Hospitals

Mining and construction sites

Camping and caravan parks

Motels/hotels

Shopping centres

www.pumpandpartners.com

- **State-of-the-art compact design, Factory pre-packaged**
- **Lower cost and less civil work than conventional pumping stations**
- **Comprehensive protection for staff, equipment and environment**
- **Reliable submersible pumps equipped**
- **Intelligent control system available**
- **Customized sizes and applications**

## What is a Prefabricated Pumping Station (PPS)

A prefabricated pumping station is a cost-effective, flexible, and reliable alternative to traditional concrete solutions in wastewater transport systems and drainage systems, built to handle effluent, drainage, and sewage from domestic, commercial, and industrial buildings as well as surface water from highways and roads. All pumps, accessories and fittings required for a pump station are pre-packaged inside a GRP/PP/PE column pit, and delivered as a PPS which is ready to install at site. It requires less civil works and save a lot of cost than conventional pumping stations.

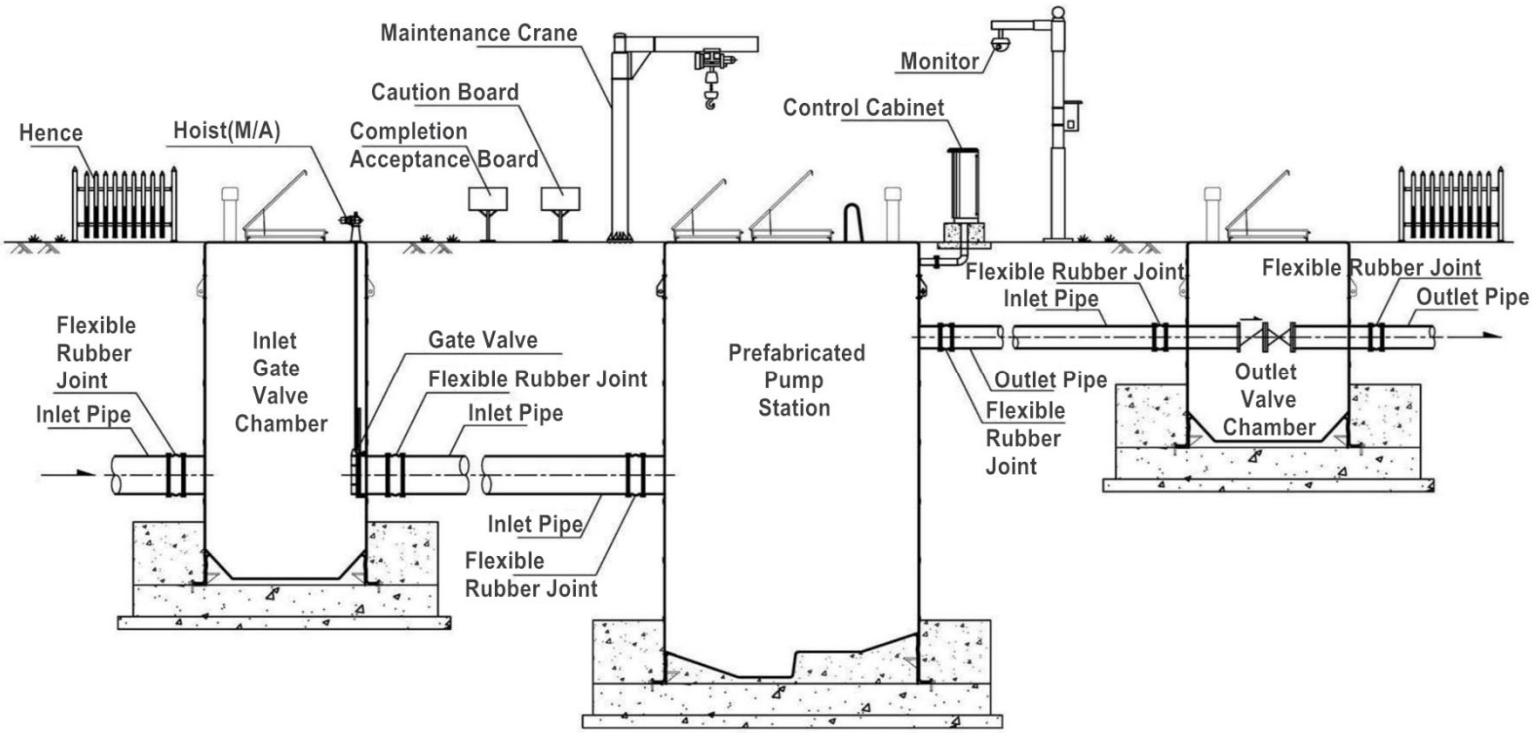


## Advantages

- Durable glass-reinforced polyester tank with unmatched robustness that by far exceeds the lifetime of a concrete pumping pit.
- Unique self-cleaning pit design for reduced sludge and odour problems, ensures robustness and guides sedimentation to the pump inlets.
- Reliable and high-performance submersible pumps are equipped.
- With the complete PPS pre-packaged in factory, it saves construction time and civil works at site, and requires lower cost for a long-term operation.

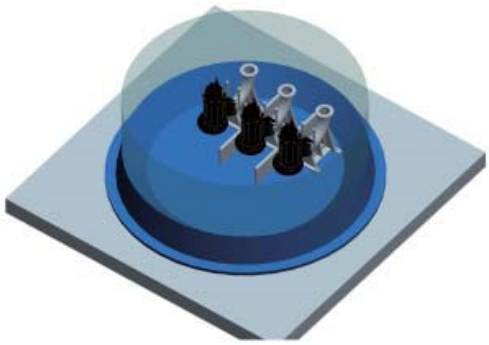

# What is a PPS consisted of

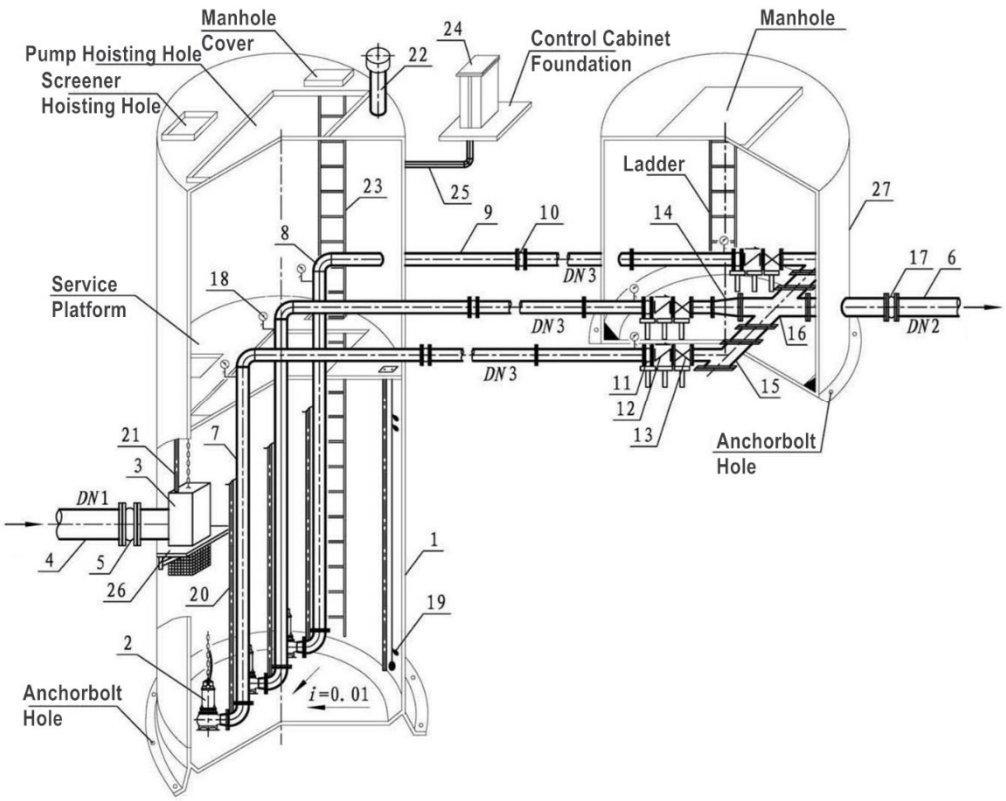


**With an outlet valve chamber**

| No. | Part |
|---|---|
| 1 | Column Pit |
| 2 | Submersible Sewage Pump |
| 3 | Screener |
| 4 | Inlet Main Pipe |
| 5 | Flexible Rubber Joint |
| 6 | Outlet Main Pipe |
| 7 | Pump Discharge Pipe |
| 8 | Bend Pipe |
| 9 | Pump Discharge Pipe |
| 10 | Flexible Rubber Joint |
| 11 | Flexible Rubber Joint |
| 12 | Check Valve |
| 13 | Gate Valve |
| 14 | Reducer |
| 15 | Tee Pipe |
| 16 | Cross Pipe |
| 17 | Flexible Rubber Joint |
| 18 | Pressure Gauge |
| 19 | Level Switch |
| 20 | Pump Guide Rail |
| 21 | Screener Guide Rail |
| 22 | Vent Pipe |
| 23 | Ladder |
| 24 | Control Cabinet |
| 25 | Cable Protection Pipe (Steel) |
| 26 | Baffle Plate |
| 27 | Valve Chamber Column Pit |

**PPS only**

| No. | Part |
|---|---|
| 1 | Column Pit |
| 2 | Submersible Sewage Pump |
| 3 | Screener |
| 4 | Inlet Main Pipe |
| 5 | Flexible Rubber Joint |
| 6 | Outlet Main Pipe |
| 7 | Pump Discharge Pipe |
| 8 | Flexible Rubber Joint |
| 9 | Check Valve |
| 10 | Gate Valve |
| 11 | Bend Pipe |
| 12 | Tee Pipe |
| 13 | Reducer |
| 14 | Flexible Rubber Joint |
| 15 | Pressure Gauge |
| 16 | Level Switch |
| 17 | Pump Guide Rail |
| 18 | Screener Guide Rail |
| 19 | Vent Pipe |
| 20 | Ladder |
| 21 | Control Cabinet |
| 22 | Cable Protection Pipe (Steel) |
| 23 | Baffle Plate |

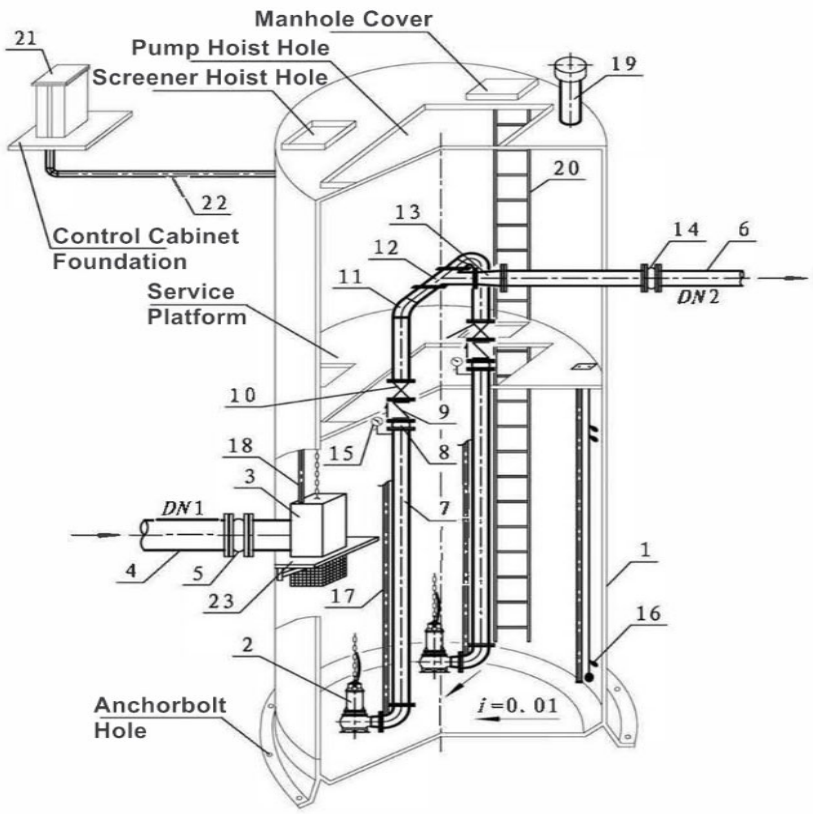

# Selection Chart (available duties and sizes are not limited to the tables)

## Rainwater PPS

| No. | Column Pit | | | | Duty of PPS | | | Submersible pump data | | | | | Other accessories | | |
|---|---|---|---|---|---|---|---|---|---|---|---|---|---|---|---|
| | Size (mm) | Mate -rial | Max. Height (mm) | Min. Foot -print ($m^2$) | Capacity ($m^3$/hr) | Head (m) | Power (kW) | Size (mm) | Nos. of Pumps | Capacity ($m^3$/hr) | Head (m) | Pump motor power (kW) | Scree ner Size (mm) | Max. Size of Inlet Pipe (mm) | Min. Size of Outlet Pipe (mm) |
| 1 | 1200 | GRP /PE /PP | 6000 | 9 | 20 | 9 | 1.5 | 50 | 2D | 10 | 10 | 0.75 | 300<DN≤400 | 400 | 80 |
| 2 | | | | | 36 | 14 | 3 | 50 | 2D | 18 | 15 | 1.5 | | | 100 |
| 3 | | | | | 48 | 19 | 8 | 50 | 2D | 24 | 20 | 4 | | | 150 |
| 4 | | | | | 56 | 9 | 3 | 65 | 2D | 28 | 10 | 1.5 | | | 150 |
| 5 | | | | | 70 | 14 | 6 | 65 | 2D | 35 | 15 | 3 | | | 150 |
| 6 | | | | | 70 | 19 | 8 | 65 | 2D | 35 | 20 | 4 | | | 150 |
| 7 | | | | | 94 | 14 | 8 | 80 | 2D | 47 | 15 | 4 | | | 150 |
| 8 | | | | | 100 | 20 | 8 | 80 | 2D | 50 | 21 | 5.5 | | | 150 |
| 9 | | | | | 110 | 9 | 11 | 80 | 2D | 55 | 10 | 3 | | | 150 |
| 10 | 2000 | GRP /PE /PP | 10000 | 16 | 84 | 9 | 4.5 | 65 | 3D | 28 | 10 | 1.5 | 600<DN<=1000 | 800 | 150 |
| 11 | | | | | 105 | 14 | 9 | 65 | 3D | 35 | 15 | 3 | | | 150 |
| 12 | | | | | 105 | 19 | 12 | 65 | 3D | 35 | 20 | 4 | | | 150 |
| 13 | | | | | 141 | 14 | 12 | 80 | 3D | 47 | 15 | 4 | | | 200 |
| 14 | | | | | 150 | 19 | 16.5 | 80 | 3D | 50 | 20 | 5.5 | | | 200 |
| 15 | | | | | 160 | 19 | 15 | 100 | 2D | 80 | 20 | 7.5 | | | 300 |
| 16 | | | | | 165 | 9 | 9 | 80 | 3D | 55 | 10 | 3 | | | 200 |
| 17 | | | | | 200 | 14 | 15 | 100 | 2D | 100 | 15 | 7.5 | | | 300 |
| 18 | | | | | 220 | 9 | 11 | 100 | 2D | 110 | 10 | 5.5 | | | 300 |
| 19 | | | | | 240 | 19 | 22.5 | 100 | 3D | 80 | 20 | 7.5 | | | 300 |
| 20 | | | | | 300 | 14 | 22.5 | 100 | 3D | 100 | 15 | 7.5 | | | 300 |
| 21 | | | | | 330 | 9 | 16.5 | 100 | 3D | 110 | 10 | 5.5 | | | 300 |
| 22 | | | | | 340 | 9 | 22 | 150 | 2D | 170 | 10 | 11 | | | 300 |
| 23 | | | | | 360 | 19 | 37 | 150 | 2D | 180 | 20 | 18.5 | | | 300 |
| 24 | | | | | 400 | 14 | 30 | 150 | 2D | 200 | 15 | 15 | | | 300 |
| 25 | 3000 | GRP /PP | 12000 | 25 | 510 | 9 | 33 | 150 | 3D | 170 | 10 | 11 | 600<DN<=1000 | 1000 | 400 |
| 26 | | | | | 540 | 19 | 55.5 | 150 | 3D | 180 | 20 | 18.5 | | | 400 |
| 27 | | | | | 600 | 9 | 45 | 150 | 3D | 200 | 10 | 15 | | | 400 |
| 28 | | | | | 600 | 14 | 45 | 150 | 3D | 200 | 15 | 15 | | | 400 |
| 29 | | | | | 690 | 14 | 55.5 | 150 | 3D | 230 | 15 | 18.5 | | | 400 |
| 30 | | | | | 870 | 19 | 90 | 150 | 3D | 290 | 20 | 30 | | | 500 |
| 31 | | | | | 1080 | 14 | 90 | 200 | 3D | 360 | 15 | 30 | | | 500 |
| 32 | | | | | 1095 | 9 | 55.5 | 200 | 3D | 365 | 10 | 18.5 | | | 500 |
| 33 | | | | | 1200 | 19 | 111 | 200 | 3D | 400 | 20 | 37 | | | 600 |
| 34 | | | | | 1200 | 14 | 90 | 250 | 2D | 600 | 15 | 45 | | | 600 |
| 35 | | | | | 1200 | 19 | 110 | 250 | 2D | 600 | 20 | 55 | | | 600 |
| 36 | | | | | 1440 | 9 | 74 | 250 | 2D | 720 | 10 | 37 | | | 600 |
| 37 | | | | | 1600 | 14 | 110 | 300 | 2D | 800 | 15 | 55 | | | 600 |
| 38 | | | | | 1900 | 19 | 180 | 300 | 2D | 950 | 20 | 90 | | | 700 |
| 39 | | | | | 1920 | 9 | 90 | 300 | 2D | 960 | 10 | 45 | | | 700 |

| No. | Column Pit | | | | Duty of PPS | | | Submersible pump data | | | | | Other accessories | | |
|---|---|---|---|---|---|---|---|---|---|---|---|---|---|---|---|
| | Size (mm) | Mate -rial | Max. Height (mm) | Min. Foot -print ($m^2$) | Capacity ($m^3$/hr) | Head (m) | Power (kW) | Size (mm) | Nos. of Pumps | Capacity ($m^3$/hr) | Head (m) | Pump motor power (kW) | Scree ner Size (mm) | Max. Size of Inlet Pipe (mm) | Min. Size of Outlet Pipe (mm) |
| 40 | 3500 | PP | 12000 | 36 | 1700 | 14 | 135 | 250 | 3D | 600 | 15 | 45 | 1000<DN<=1500 | 1200 | 600 |
| 41 | | | | | 1700 | 19 | 165 | 250 | 3D | 600 | 20 | 55 | | | 600 |
| 42 | | | | | 2000 | 9 | 111 | 250 | 3D | 720 | 10 | 37 | | | 700 |
| 43 | | | | | 2160 | 14 | 165 | 300 | 3D | 800 | 15 | 55 | | | 700 |
| 44 | | | | | 2600 | 19 | 270 | 300 | 3D | 950 | 20 | 90 | | | 800 |
| 45 | | | | | 2650 | 9 | 135 | 300 | 3D | 960 | 10 | 45 | | | 800 |
| 46 | | | | | 3000 | 15 | 180 | 350 | 2D | 1500 | 16 | 90 | | | 800 |
| 47 | | | | | 3000 | 19 | 264 | 350 | 2D | 1500 | 20 | 132 | | | 800 |
| 48 | | | | | 3600 | 9 | 150 | 350 | 2D | 1800 | 10 | 75 | | | 900 |
| 49 | 3800 | GRP | 12000 | 36 | 1700 | 14 | 135 | 250 | 3D | 600 | 15 | 45 | 1000<DN<=1500 | 1200 | 600 |
| 50 | | | | | 1700 | 19 | 165 | 250 | 3D | 600 | 20 | 55 | | | 600 |
| 51 | | | | | 2000 | 9 | 111 | 250 | 3D | 720 | 10 | 37 | | | 700 |
| 52 | | | | | 2160 | 14 | 165 | 300 | 3D | 800 | 15 | 55 | | | 700 |
| 53 | | | | | 2600 | 19 | 270 | 300 | 3D | 950 | 20 | 90 | | | 800 |
| 54 | | | | | 2650 | 9 | 135 | 300 | 3D | 960 | 10 | 45 | | | 800 |
| 55 | | | | | 3000 | 15 | 180 | 350 | 2D | 1500 | 16 | 90 | | | 800 |
| 56 | | | | | 3000 | 19 | 264 | 350 | 2D | 1500 | 20 | 132 | | | 800 |
| 57 | | | | | 3600 | 9 | 150 | 350 | 2D | 1800 | 10 | 75 | | | 900 |
| 58 | 4200 | GRP | 12000 | 40 | 2160 | 14 | 165 | 300 | 3D | 800 | 15 | 55 | 1000<DN<=1500 | 1500 | 800 |
| 59 | | | | | 2600 | 19 | 270 | 300 | 3D | 950 | 20 | 90 | | | 800 |
| 60 | | | | | 2650 | 9 | 135 | 300 | 3D | 960 | 10 | 45 | | | 800 |
| 61 | | | | | 4000 | 19 | 370 | 400 | 2D | 2000 | 20 | 185 | | | 1000 |
| 62 | | | | | 4200 | 15 | 270 | 350 | 3D | 1500 | 16 | 90 | | | 1000 |
| 63 | | | | | 4200 | 19 | 396 | 350 | 3D | 1500 | 20 | 132 | | | 1000 |
| 64 | | | | | 4400 | 15 | 370 | 400 | 2D | 2200 | 17 | 185 | | | 1000 |
| 65 | | | | | 4600 | 9 | 264 | 400 | 2D | 2300 | 10 | 132 | | | 1000 |
| 66 | | | | | 4900 | 9 | 225 | 350 | 3D | 1800 | 10 | 75 | | | 1000 |

## Sewage Wastewater PPS

| No. | Column Pit | | | | Duty of PPS | | | Submersible pump data | | | | | Other accessories | | |
|---|---|---|---|---|---|---|---|---|---|---|---|---|---|---|---|
| | Size (mm) | Mate -rial | Max. Height (mm) | Min. Foot -print ($m^2$) | Capacity ($m^3$/hr) | Head (m) | Power (kW) | Size (mm) | Nos. of Pumps | Capacity ($m^3$/hr) | Head (m) | Pump motor power (kW) | Scree ner Size (mm) | Max. Size of Inlet Pipe (mm) | Min. Size of Outlet Pipe (mm) |
| 1 | 1200 | GRP /PE /PP | 6000 | 9 | 10 | 10 | 3.7 | 50 | 1D1S | 10 | 10 | 0.75 | DN 300 2.2kW | 400 | 80 |
| 2 | | | | | 18 | 15 | 5.2 | 50 | 1D1S | 18 | 15 | 1.5 | | | 80 |
| 3 | | | | | 24 | 20 | 10.2 | 50 | 1D1S | 24 | 20 | 4 | | | 80 |
| 4 | | | | | 28 | 10 | 5.2 | 65 | 1D1S | 28 | 10 | 1.5 | | | 100 |
| 5 | | | | | 35 | 15 | 8.2 | 65 | 1D1S | 35 | 15 | 3 | | | 100 |
| 6 | | | | | 35 | 20 | 10.2 | 65 | 1D1S | 35 | 20 | 4 | | | 100 |
| 7 | | | | | 47 | 15 | 10.2 | 80 | 1D1S | 47 | 15 | 4 | | | 150 |
| 8 | | | | | 50 | 21 | 13.2 | 80 | 1D1S | 50 | 21 | 5.5 | | | 150 |
| 9 | | | | | 55 | 10 | 8.2 | 80 | 1D1S | 55 | 10 | 3 | | | 150 |

| No. | Column Pit | | | | Duty of PPS | | | Submersible pump data | | | | | Other accessories | | |
|---|---|---|---|---|---|---|---|---|---|---|---|---|---|---|---|
| | Size (mm) | Mate -rial | Max. Height (mm) | Min. Foot -print ($m^2$) | Capacity ($m^3$/hr) | Head (m) | Power (kW) | Size (mm) | Nos. of Pumps | Capacity ($m^3$/hr) | Head (m) | Pump motor power (kW) | Scree ner Size (mm) | Max. Size of Inlet Pipe (mm) | Min. Size of Outlet Pipe (mm) |
| 10 | 2000 | GRP /PE /PP | 10000 | 16 | 56 | 9 | 6.7 | 65 | 2D1S | 28 | 10 | 1.5 | DN 600 3.7kW | 800 | 150 |
| 11 | | | | | 70 | 14 | 11.2 | 65 | 2D1S | 35 | 15 | 3 | | | 150 |
| 12 | | | | | 70 | 19 | 14.2 | 65 | 2D1S | 35 | 20 | 4 | | | 150 |
| 13 | | | | | 80 | 20 | 17.2 | 100 | 1D1S | 80 | 20 | 7.5 | | | 150 |
| 14 | | | | | 94 | 14 | 14.2 | 80 | 2D1S | 47 | 15 | 4 | | | 150 |
| 15 | | | | | 100 | 15 | 17.2 | 100 | 1D1S | 100 | 15 | 7.5 | | | 150 |
| 16 | | | | | 100 | 19 | 18.7 | 80 | 2D1S | 50 | 20 | 5.5 | | | 150 |
| 17 | | | | | 110 | 9 | 11.2 | 80 | 2D1S | 55 | 10 | 3 | | | 150 |
| 18 | | | | | 110 | 10 | 13.2 | 100 | 1D1S | 110 | 10 | 5.5 | | | 150 |
| 19 | | | | | 160 | 19 | 24.7 | 100 | 2D1S | 80 | 20 | 7.5 | | | 200 |
| 20 | | | | | 170 | 10 | 24.2 | 150 | 1D1S | 170 | 10 | 11 | | | 200 |
| 21 | | | | | 180 | 20 | 39.2 | 150 | 1D1S | 180 | 20 | 18.5 | | | 200 |
| 22 | | | | | 200 | 14 | 24.7 | 100 | 2D1S | 100 | 15 | 7.5 | | | 250 |
| 23 | | | | | 200 | 15 | 32.2 | 150 | 1D1S | 200 | 15 | 15 | | | 250 |
| 24 | | | | | 220 | 9 | 18.7 | 100 | 2D1S | 110 | 10 | 5.5 | | | 250 |
| 25 | 3000 | GRP /PP | 12000 | 25 | 340 | 9 | 36.7 | 150 | 2D1S | 170 | 10 | 11 | DN 1300 3.7kW | 1000 | 300 |
| 26 | | | | | 360 | 19 | 59.2 | 150 | 2D1S | 180 | 20 | 18.5 | | | 300 |
| 27 | | | | | 400 | 9 | 48.7 | 150 | 2D1S | 200 | 10 | 15 | | | 300 |
| 28 | | | | | 400 | 14 | 48.7 | 150 | 2D1S | 200 | 15 | 15 | | | 300 |
| 29 | | | | | 460 | 14 | 59.2 | 150 | 2D1S | 230 | 15 | 18.5 | | | 400 |
| 30 | | | | | 580 | 19 | 93.7 | 150 | 2D1S | 290 | 20 | 30 | | | 400 |
| 31 | | | | | 600 | 15 | 93.7 | 250 | 1D1S | 600 | 15 | 45 | | | 400 |
| 32 | | | | | 600 | 20 | 113.7 | 250 | 1D1S | 600 | 20 | 55 | | | 400 |
| 33 | | | | | 720 | 10 | 77.7 | 250 | 1D1S | 720 | 10 | 37 | | | 400 |
| 34 | | | | | 720 | 14 | 93.7 | 200 | 2D1S | 360 | 15 | 30 | | | 400 |
| 35 | | | | | 730 | 9 | 59.2 | 200 | 2D1S | 365 | 10 | 18.5 | | | 400 |
| 36 | | | | | 800 | 15 | 113.7 | 300 | 1D1S | 800 | 15 | 55 | | | 500 |
| 37 | | | | | 800 | 19 | 114.7 | 200 | 2D1S | 400 | 20 | 37 | | | 500 |
| 38 | | | | | 950 | 20 | 183.7 | 300 | 1D1S | 950 | 20 | 90 | | | 500 |
| 39 | | | | | 960 | 10 | 93.7 | 300 | 1D1S | 960 | 10 | 45 | | | 500 |
| 40 | 3500 | PP | 12000 | 36 | 1200 | 14 | 139 | 250 | 2D1S | 600 | 15 | 45 | DN 2100 4.0kW | 1200 | 600 |
| 41 | | | | | 1200 | 19 | 169 | 250 | 2D1S | 600 | 20 | 55 | | | 600 |
| 42 | | | | | 1440 | 9 | 115 | 250 | 2D1S | 720 | 10 | 37 | | | 600 |
| 43 | | | | | 1500 | 16 | 184 | 350 | 1D1S | 1500 | 16 | 90 | | | 600 |
| 44 | | | | | 1500 | 20 | 268 | 350 | 1D1S | 1500 | 20 | 132 | | | 600 |
| 45 | | | | | 1600 | 14 | 169 | 300 | 2D1S | 800 | 15 | 55 | | | 700 |
| 46 | | | | | 1800 | 10 | 154 | 350 | 1D1S | 1800 | 10 | 75 | | | 700 |
| 47 | | | | | 1900 | 19 | 274 | 300 | 2D1S | 950 | 20 | 90 | | | 700 |
| 48 | | | | | 1920 | 9 | 139 | 300 | 2D1S | 960 | 10 | 45 | | | 700 |

| No. | Column Pit | | | | Duty of PPS | | | Submersible pump data | | | | | Other accessories | | |
|---|---|---|---|---|---|---|---|---|---|---|---|---|---|---|---|
| | Size (mm) | Mate -rial | Max. Height (mm) | Min. Foot -print ($m^2$) | Capacity ($m^3$/hr) | Head (m) | Power (kW) | Size (mm) | Nos. of Pumps | Capacity ($m^3$/hr) | Head (m) | Pump motor power (kW) | Scree ner Size (mm) | Max. Size of Inlet Pipe (mm) | Min. Size of Outlet Pipe (mm) |
| 49 | | | | | 1200 | 14 | 139 | 250 | 2D1S | 600 | 15 | 45 | | | 600 |
| 50 | | | | | 1200 | 19 | 169 | 250 | 2D1S | 600 | 20 | 55 | | | 600 |
| 51 | | | | | 1440 | 9 | 115 | 250 | 2D1S | 720 | 10 | 37 | | | 600 |
| 52 | | | | | 1500 | 16 | 184 | 350 | 1D1S | 1500 | 16 | 90 | DN | | 600 |
| 53 | 3800 | GRP | 12000 | 36 | 1500 | 20 | 268 | 350 | 1D1S | 1500 | 20 | 132 | 2100 | 1200 | 600 |
| 54 | | | | | 1600 | 14 | 169 | 300 | 2D1S | 800 | 15 | 55 | 4.0kW | | 700 |
| 55 | | | | | 1800 | 10 | 154 | 350 | 1D1S | 1800 | 10 | 75 | | | 700 |
| 56 | | | | | 1900 | 19 | 274 | 300 | 2D1S | 950 | 20 | 90 | | | 700 |
| 57 | | | | | 1920 | 9 | 139 | 300 | 2D1S | 960 | 10 | 45 | | | 700 |
| 58 | | | | | 1600 | 14 | 170 | 300 | 2D1S | 800 | 15 | 55 | | | 700 |
| 59 | | | | | 1900 | 19 | 275 | 300 | 2D1S | 950 | 20 | 90 | | | 700 |
| 60 | | | | | 1920 | 9 | 140 | 300 | 2D1S | 960 | 10 | 45 | | | 700 |
| 61 | | | | | 2000 | 20 | 375 | 400 | 1D1S | 2000 | 20 | 185 | DN | | 700 |
| 62 | 4200 | GRP | 12000 | 40 | 2200 | 17 | 375 | 400 | 1D1S | 2200 | 17 | 185 | 3900 | 1500 | 700 |
| 63 | | | | | 2300 | 10 | 269 | 400 | 1D1S | 2300 | 10 | 132 | 5.0kW | | 800 |
| 64 | | | | | 3000 | 15 | 275 | 350 | 2D1S | 1500 | 16 | 90 | | | 900 |
| 65 | | | | | 3000 | 19 | 401 | 350 | 2D1S | 1500 | 20 | 132 | | | 900 |
| 66 | | | | | 3600 | 9 | 230 | 350 | 2D1S | 1800 | 10 | 75 | | | 900 |

Note: D-duty, S-standby. 2D1S means 3 nos. of pumps are installed inside column pit. 1D1S means 2 nos.

Changzhou Pump and Partners Co.,Ltd.

Addr.:No.8 Huashan Road, Xinbei District, Changzhou
Mobile/Whatsapp/Line +86(0)18094438566
Email:toddtao91@gmail.com
todd.tao@pumpandpartners.com
www.pumpandpartners.com